WALDORF WALL SMALL HARDWIRE

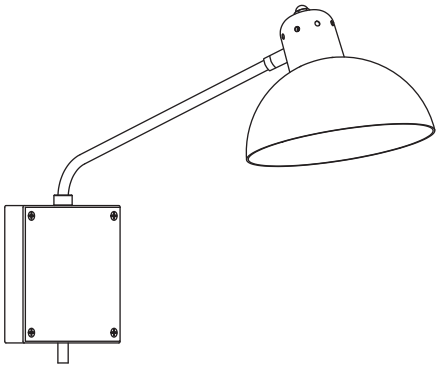

1 x

4 x

1 x 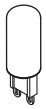

4.5W

1 x 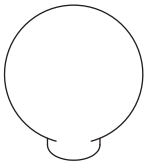

G60

- To be installed by an electrician to an electrical box
- Use appropriate screws and anchors where necessary
- Wear enclosed gloves when handling lamp
- Handle materials with care. Please consult lamp maintenance sheet on our web site

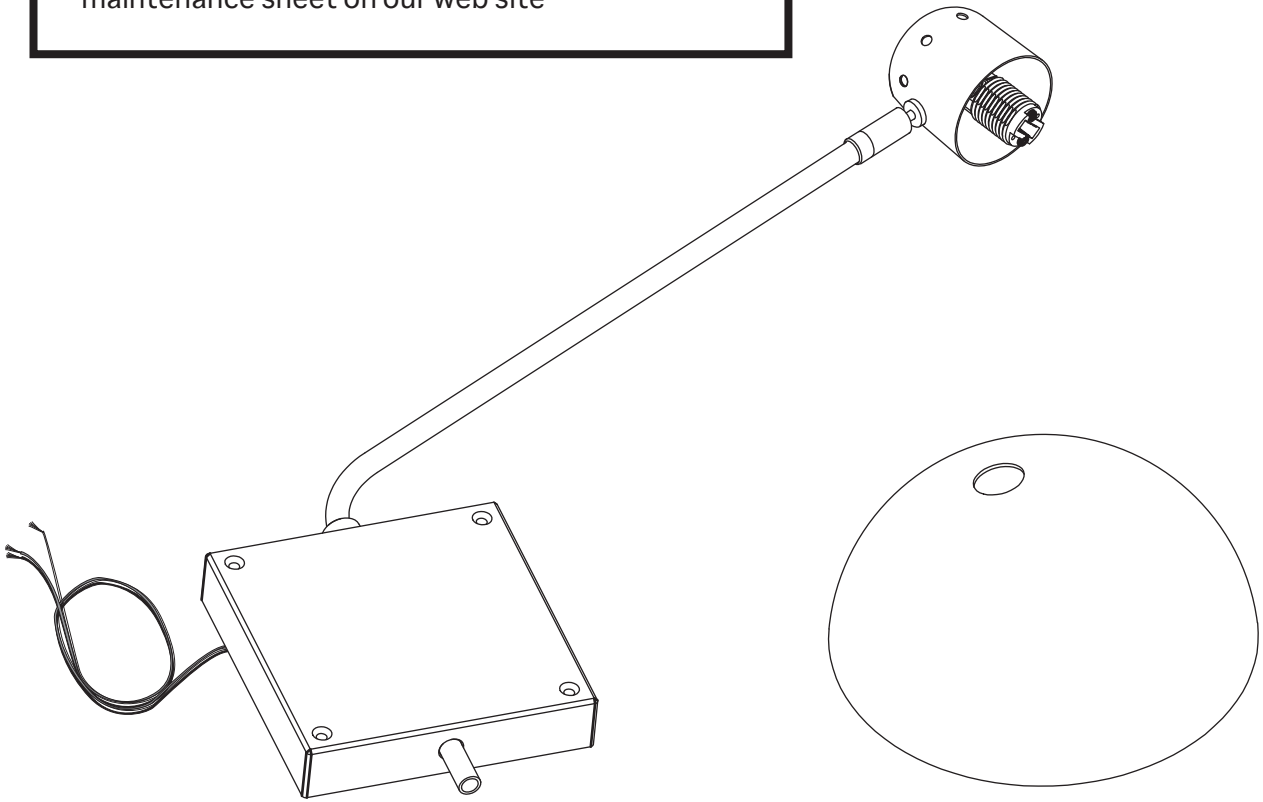

lambert&fils

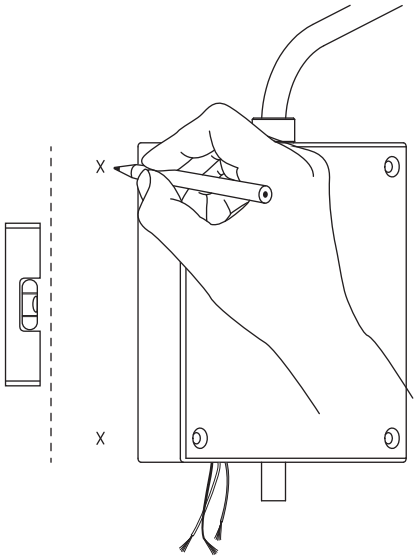

1

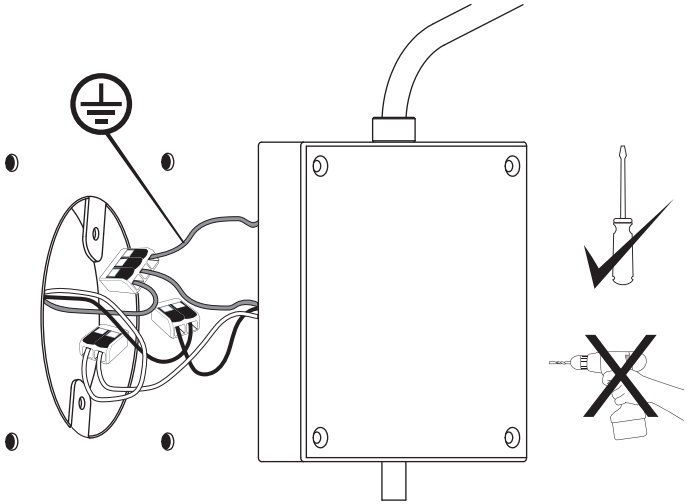

2

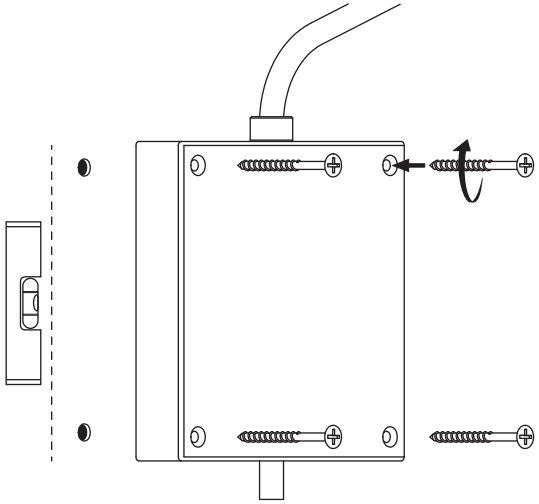

* Use appropriate anchors

3

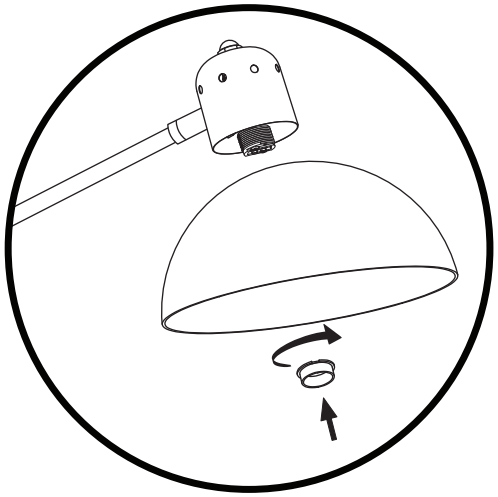

4

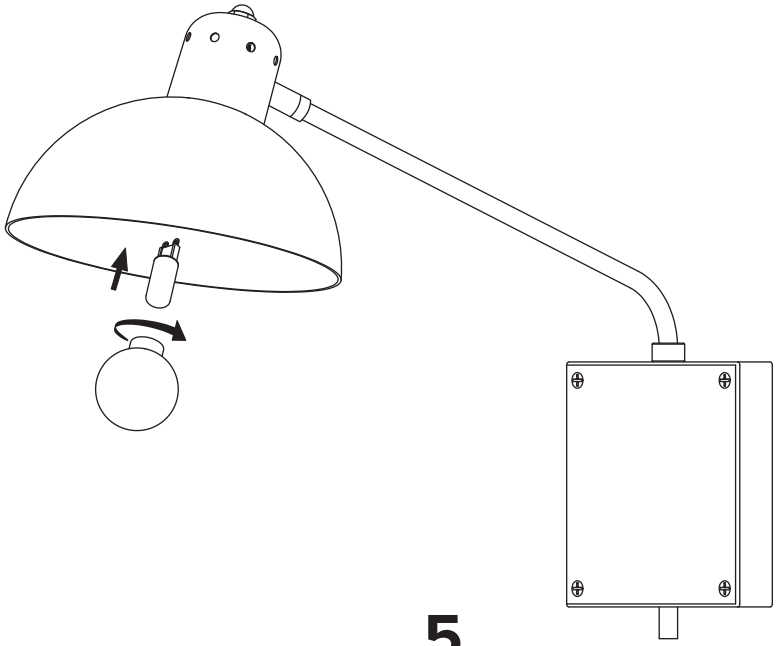
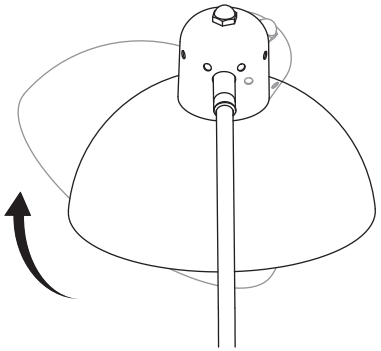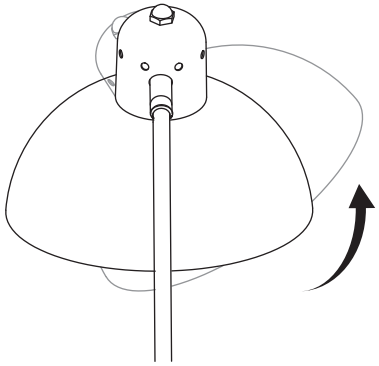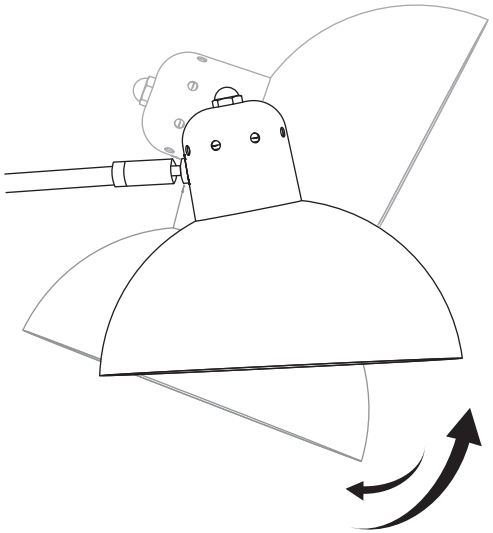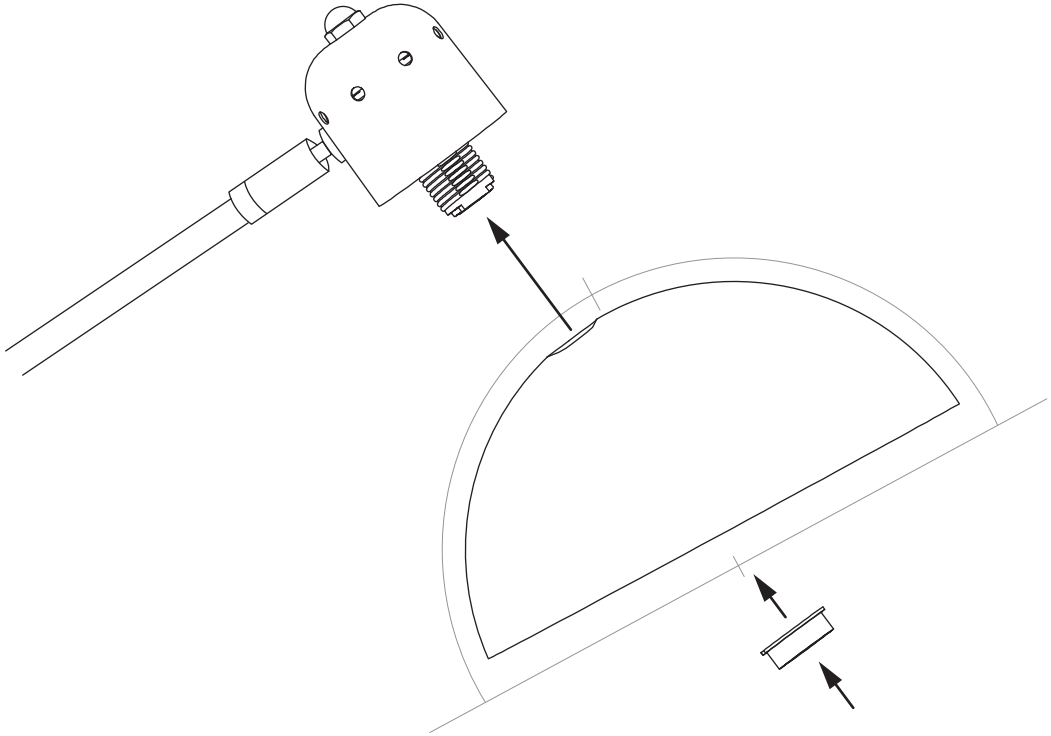
5