CLIFF SUSPENSION 07

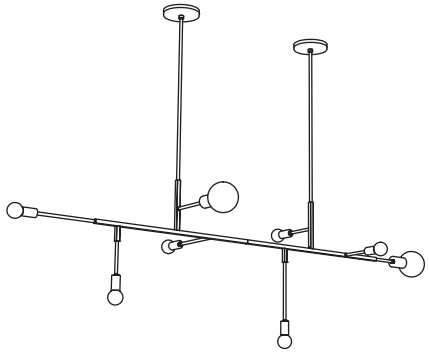

2 x 1 x 6 x 3.5W 6 x G50 2 x 4.5W 2 x G80

- To be installed by an electrician to an electrical box
- Use appropriate screws and anchors where necessary
- Wear enclosed gloves when handling lamp
- Handle materials with care. Please consult lamp maintenance sheet on our web site

8 lbs.

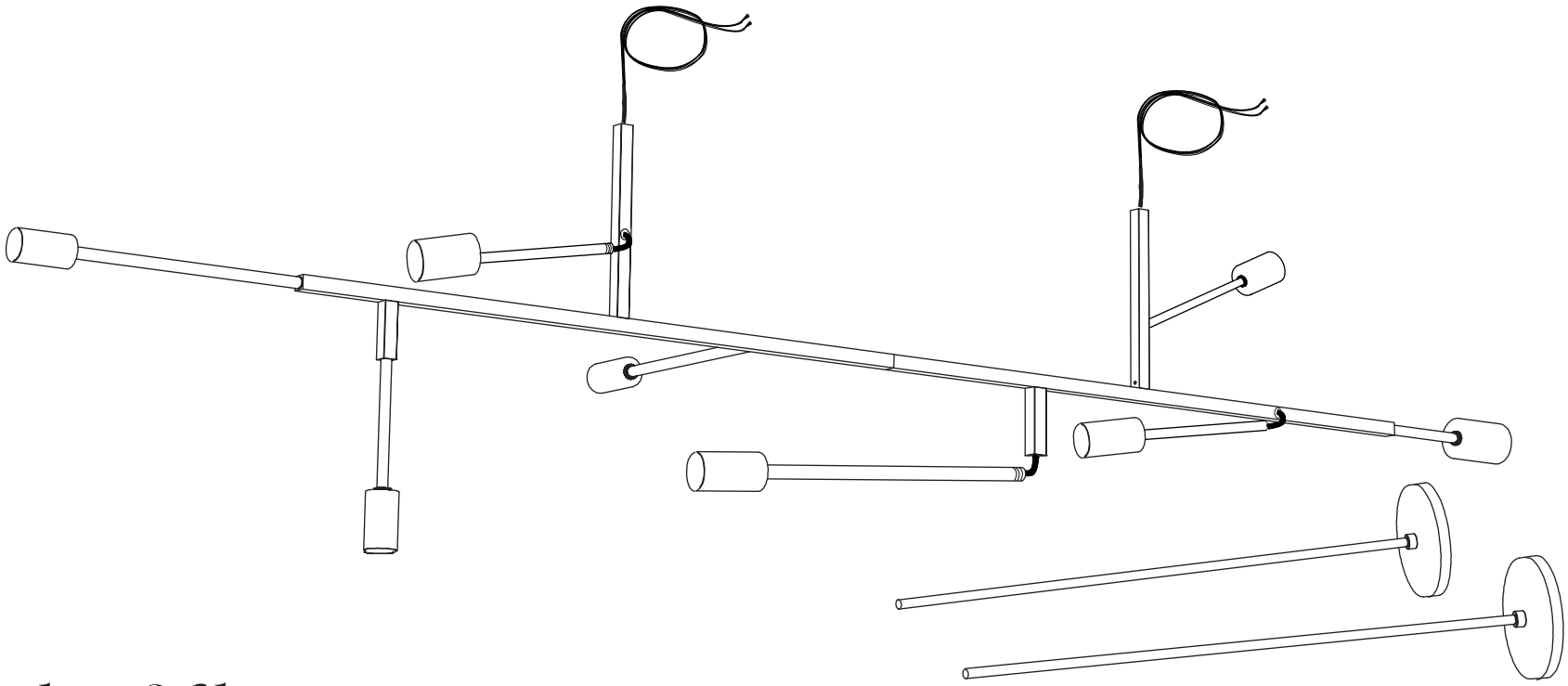

lambert&fils

1

Carefully install the five arms that were removed for shipping by twisting them into place.

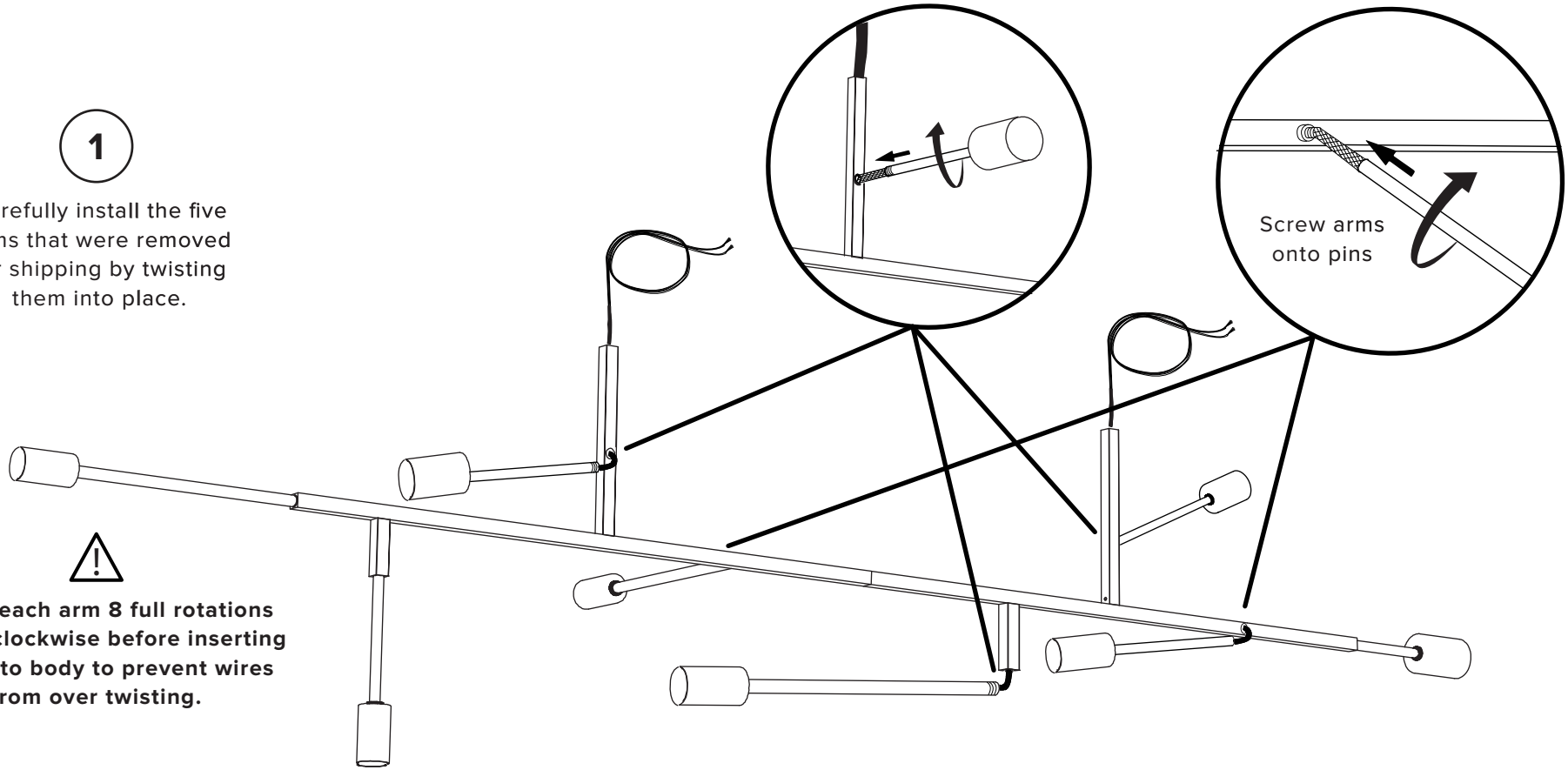

Rotate each arm 8 full rotations counterclockwise before inserting arms into body to prevent wires from over twisting.

2

Install canopies onto ceiling rods

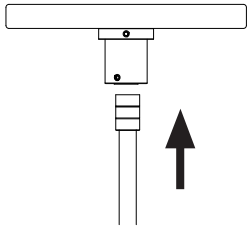

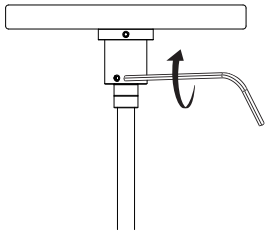

SCREW GENTLY BUT FIRMLY

3

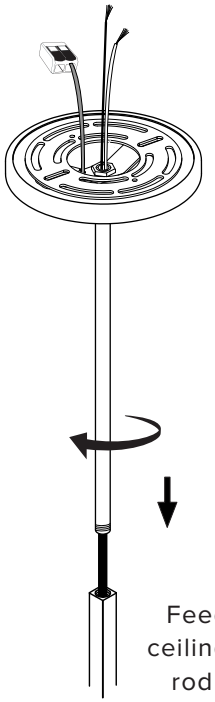

Feed wire through ceiling rod and screw rod into luminaire.

4

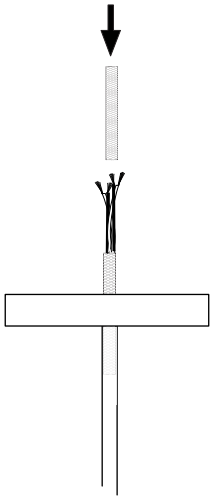

5

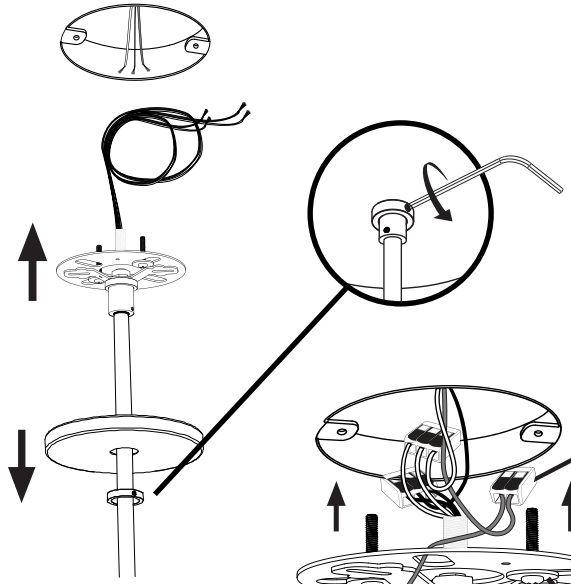

Make connection

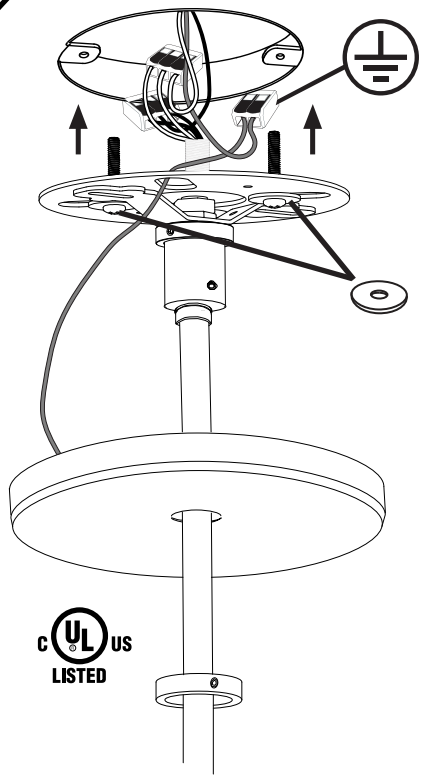

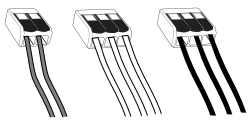

green white black
(neutral) (live)

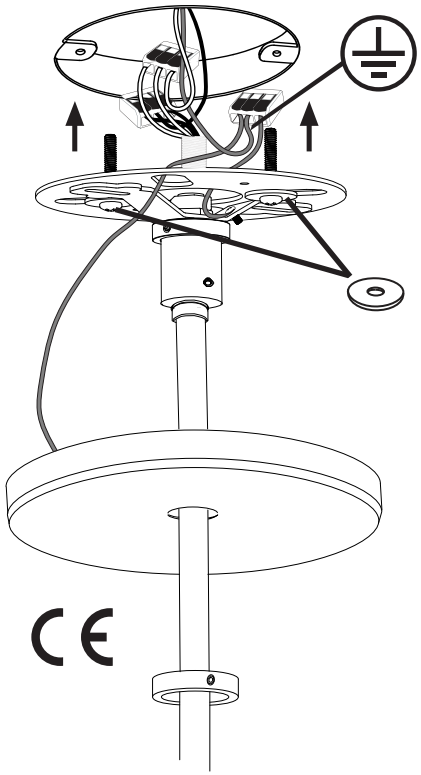

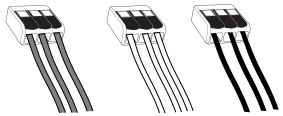

green/ blue brown
yellow (neutral) (live)

6

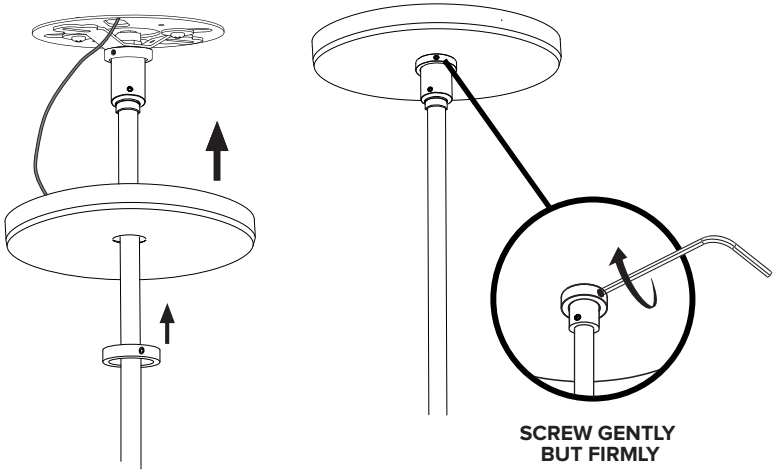

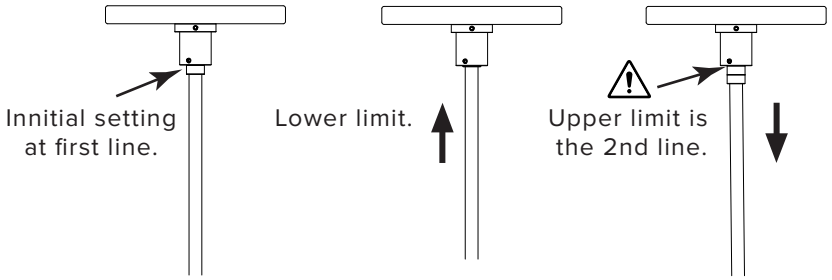

Note that the ceiling rod is adjustable

7
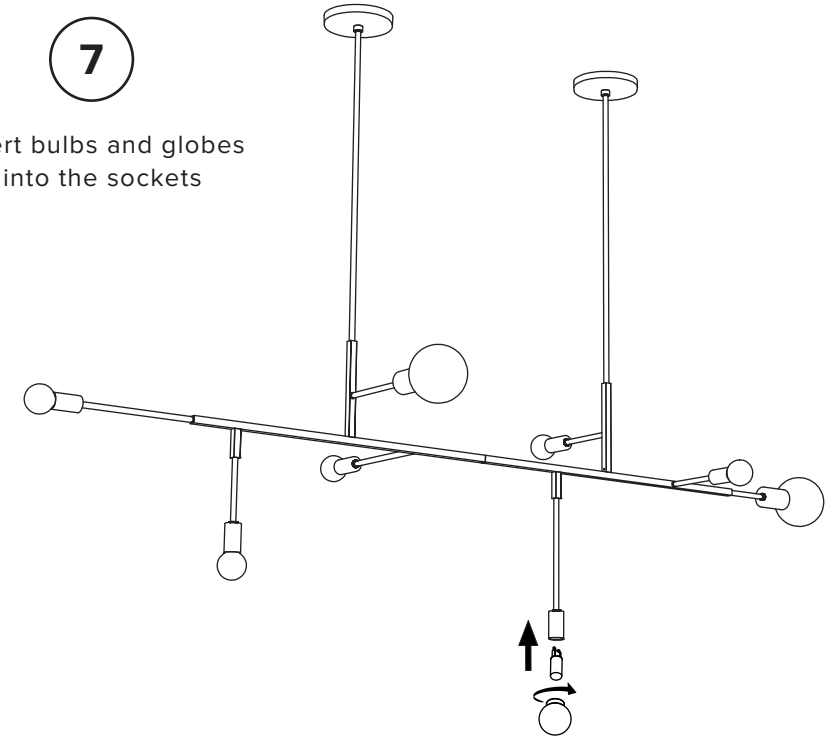
Insert bulbs and globes
into the sockets