# BEAUBIEN SUSPENSION

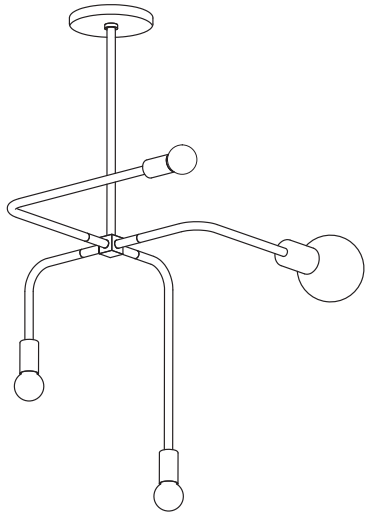

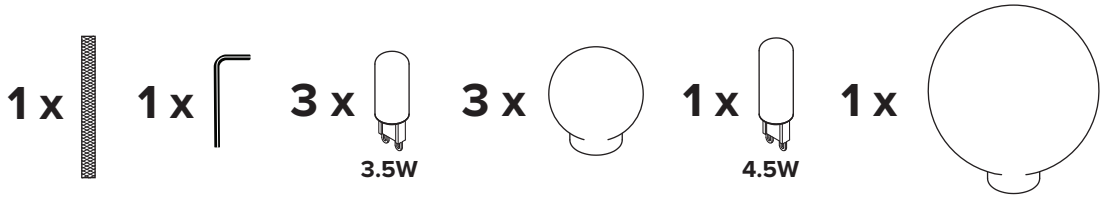


- To be installed by an electrician to an electrical box
- Use appropriate screws and anchors where necessary
- Wear enclosed gloves when handling lamp
- Handle materials with care. Please consult lamp maintenance sheet on our web site

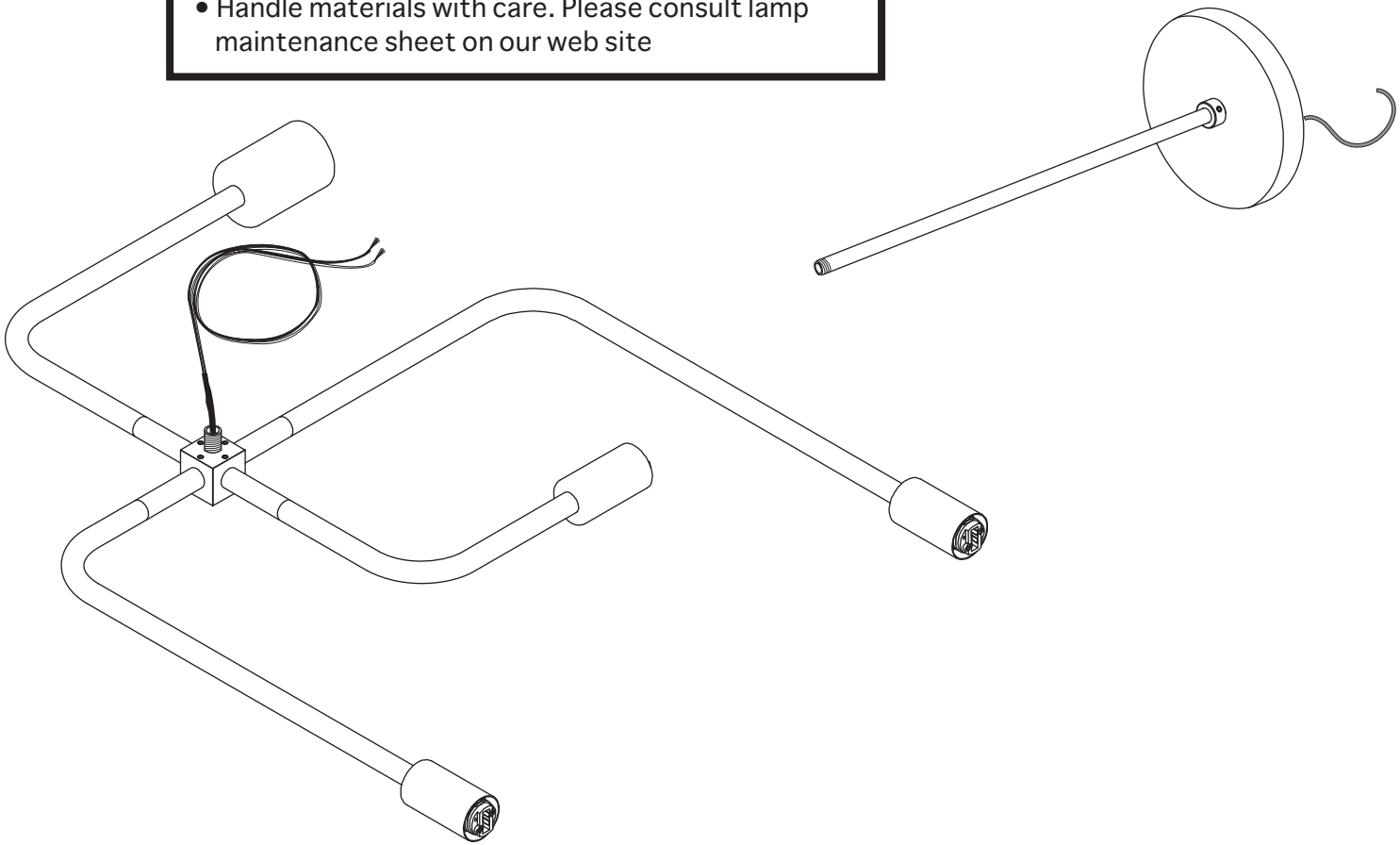

lambert&fils

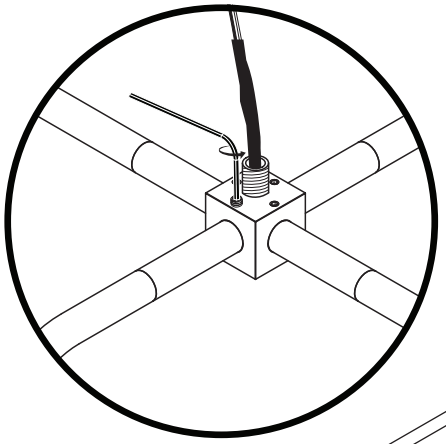

* Screw gently, but firmly

1

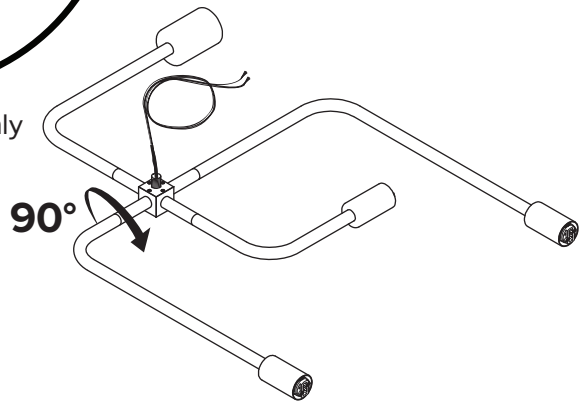


2

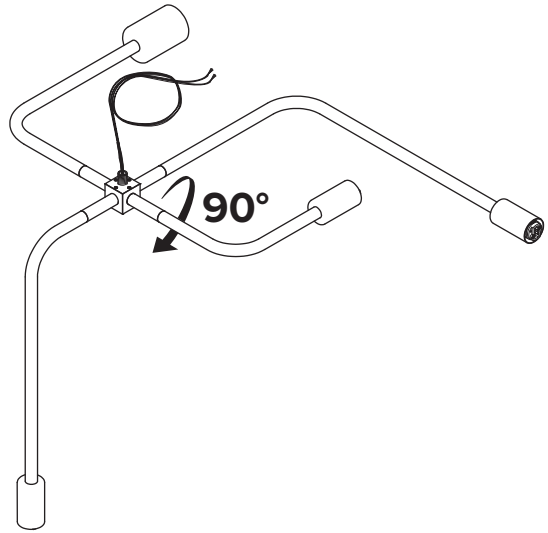


3

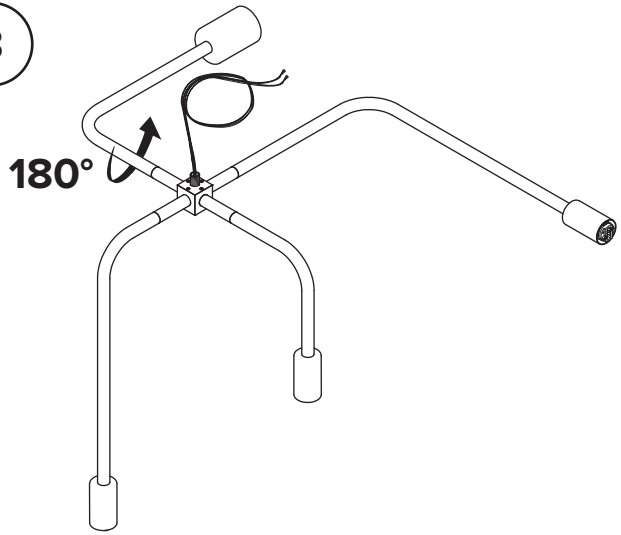


4

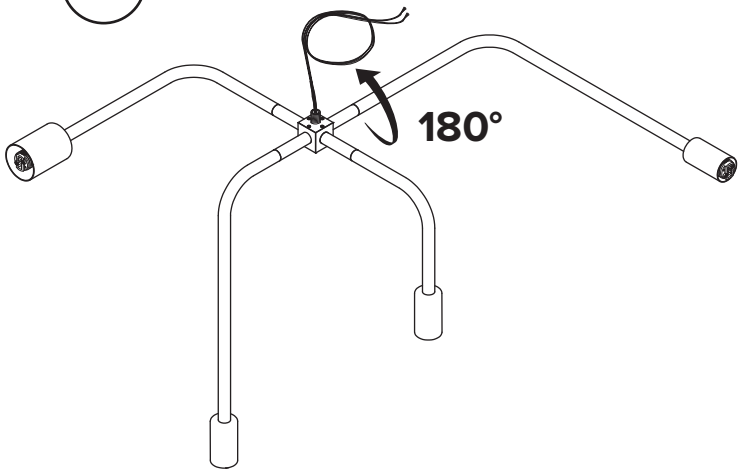

5

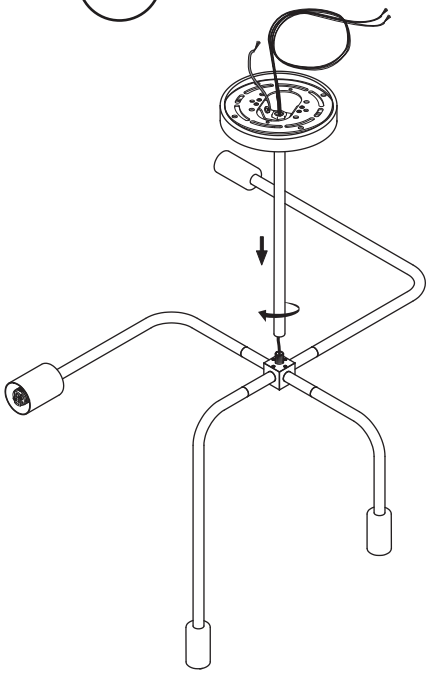

6

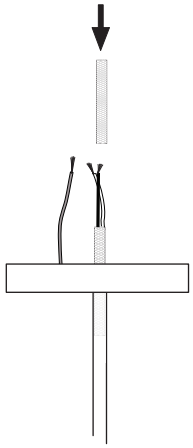

7

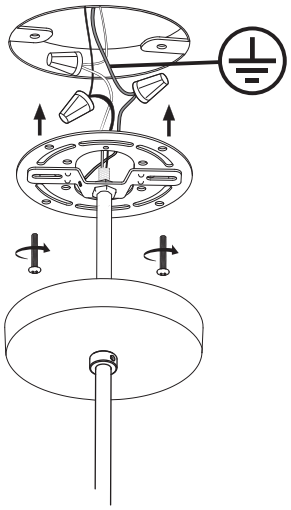

8

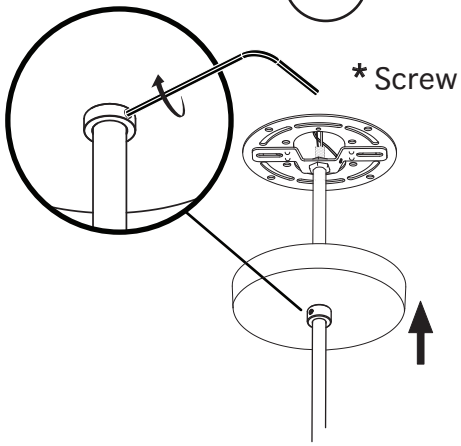

* Screw gently, but firmly
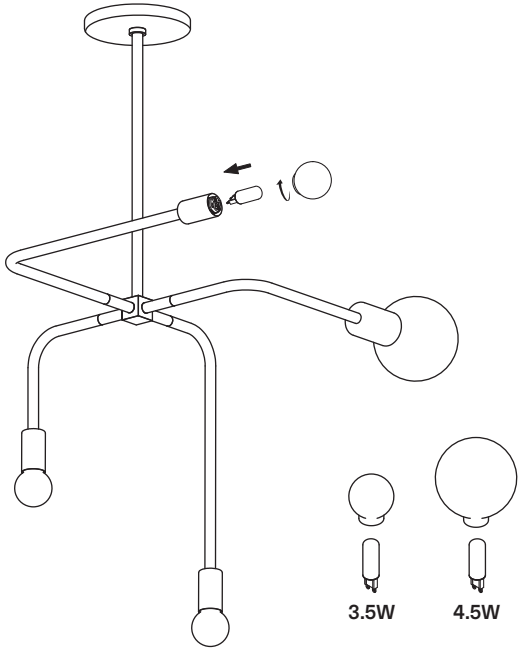
9